Module: 5

Special Purpose Diodes

Characteristics and operation of Zener Diode and application as a voltage regulator. Basic and structure of LED. Application of LED in indicative and lighting displays.

Zener Diode

A Zener diode is a highly doped semiconductor device specifically designed to function in the reverse direction. It is made with a wide range of Zener voltages (Vz).

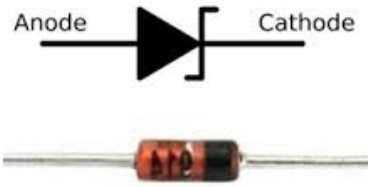

Operation: A Zener diode functions similarly to a regular semiconductor PN junction diode when forward-biased. However, in reverse-biased mode, a small leakage current flows through the diode. As the reverse voltage across Zener diode increases and reaches the predetermined breakdown voltage (V_Z), the junction experiences a breakdown, allowing current to flow through Zener diode in the opposite direction. This current reaches a maximum level determined by the series resistor, after which it stabilizes and remains constant across a wide range of applied voltages.

There are two types of breakdowns in a Zener Diode: **Zener Breakdown and Avalanche Breakdown**

Zener Breakdown in Zener Diode

When the reverse bias voltage applied to a Zener diode approaches its Zener voltage, the electric field within the depletion region becomes strong enough to attract and remove electrons from their valence band. These valence electrons, energized by the intense electric field, break free from their parent atoms. This phenomenon takes place in the Zener breakdown region, where even a slight increase in voltage leads to a rapid surge in electric current.

Avalanche Breakdown in Zener Diode

Avalanche breakdown occurs in both normal diodes and Zener diodes when subjected to high reverse voltage. When a significant reverse voltage is applied to the PN junction, the free electrons gain enough energy to accelerate at high velocities. These high-velocity electrons collide with other atoms (collide with electrons in the covalent bond) causing the ejection of additional electrons. This continuous collision process generates a large number of free electrons, resulting in a rapid increase in electric current through the diode. In the case of a normal diode, this sudden surge in current could permanently

damage it. However, a Zener diode is specifically designed to withstand avalanche breakdown and can handle the sudden current spike.

The avalanche effect allows a larger current through the diode compared to what a Zener breakdown would permit.

Characteristics of Zener diode:

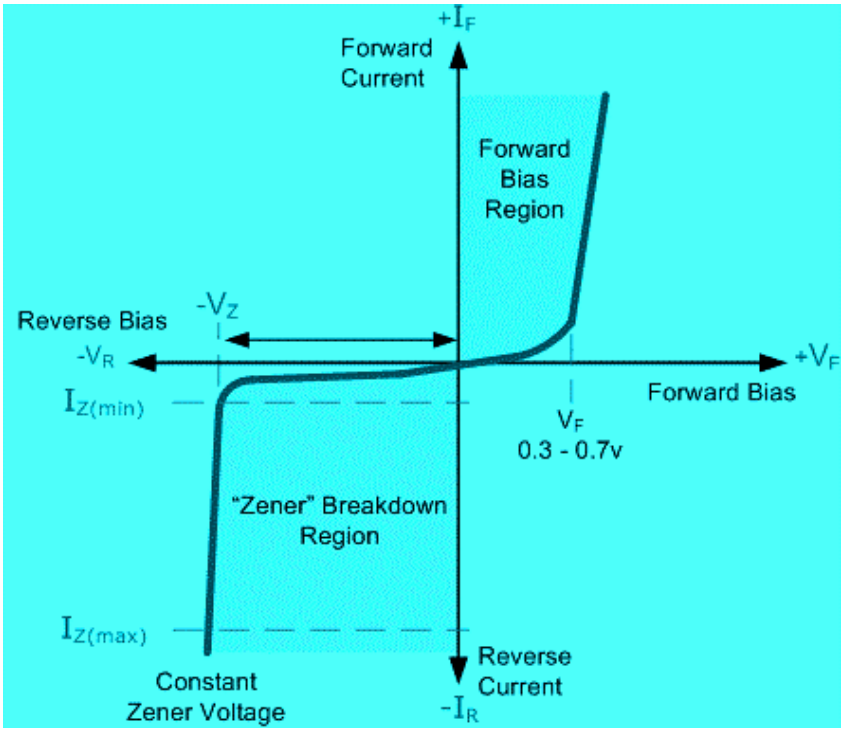

The V-I characteristics of a Zener diode can be divided into two parts as follows: a. Forward Characteristics, b. Reverse Characteristics

a. Forward Characteristics of Zener Diode:

The first quadrant in the graph represents the forward characteristics of a Zener diode. It is almost identical to the forward characteristics of P-N junction diode.

b. Reverse Characteristics of Zener Diode:

When a reverse voltage is applied to a Zener voltage, a small leakage current flows through the diode. As the reverse voltage across Zener diode increases and reaches the predetermined breakdown voltage (V_Z), the junction experiences a breakdown, allowing current to flow through Zener diode in the opposite direction. This current reaches a maximum level determined by the series resistor, after which it stabilizes and remains constant across a wide range of applied voltages.

Application of Zener Diode:

Zener diode as a voltage regulator:

Figure shows the circuit diagram of a voltage regulator using a Zener diode.

During reverse biased, that is the Cathode becomes more positive than the Anode, as soon as the reverse voltage exceeds a pre-determined value (V_Z), the *Zener Breakdown* occurs and the current starts to flow through the Zener diode in the reverse direction. This current reaches a maximum level determined by the series resistor R_S, after which it stabilizes and remains constant across a wide range of applied voltages.

The voltage across a Zener diode remains constant equal to V_Z irrespective of changes in V_{in} and I_L. There is a series resistor R_S connected to limit the total current drawn from the unregulated DC power supply (V_{in}) into the diode to a safe value. As the output voltage (V_o) across load resistor R_L is constant and equal to V_Z, we get a regulated output voltage.

If V_{in} increases, then I_S increases but I_L is remains constant as $I_L = V_Z / R_L$. Hence I_Z increases as $I_Z = I_S - I_L$

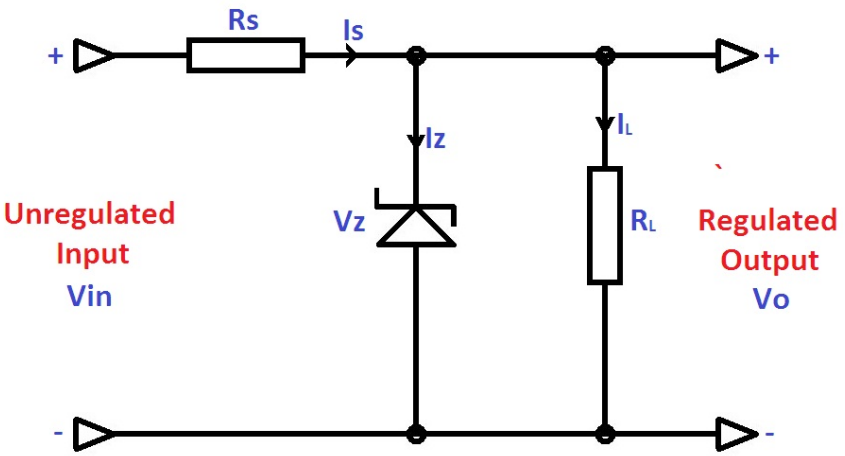

Light Emitting Diode (LED)

The LED is a special type of diode and they have similar electrical characteristics to a PN junction diode. Hence the LED allows the flow of current in the forward direction to emits light and blocks the current in the reverse direction.

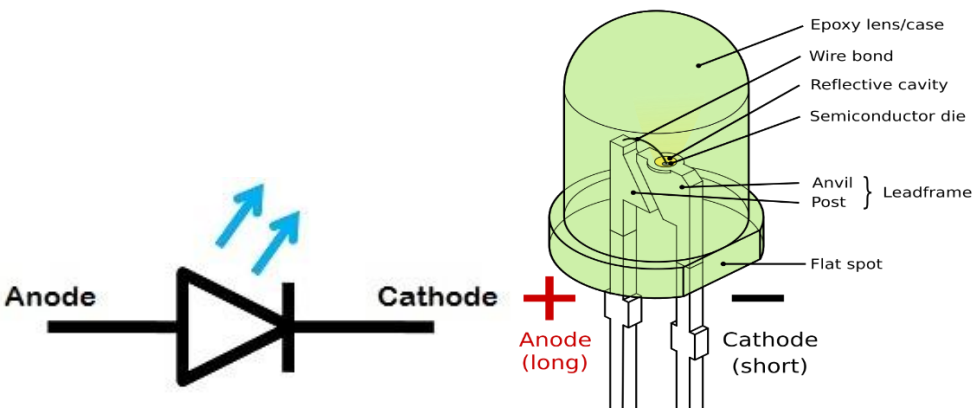

The LED symbol is similar to a diode symbol except for two small arrows that specify the emission of light, thus it is called LED (light-emitting diode). The LED includes two terminals namely anode (+) and the cathode (-). The LED symbol is shown below.

LED is **constructed** by depositing three semiconductor layers on the substrate. The three semiconductor layers deposited on the substrate are n-type semiconductor, p-type semiconductor and active region. Active region is present in between the n-type and p-type semiconductor layers.
The construction of LED is similar to the normal p-n junction diode except that gallium, phosphorus and arsenic materials are used for construction instead of silicon or germanium materials

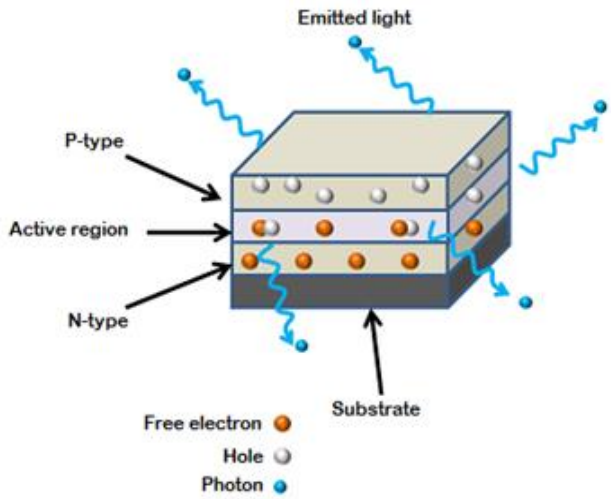

Construction of LED

Different materials emit different colours of light.
Gallium arsenide LEDs emit red and infrared light.
Gallium nitride LEDs emit bright blue light.
Yttrium aluminium garnet LEDs emit white light.
Gallium phosphide LEDs emit red, yellow and green light.
Aluminium gallium nitride LEDs emit ultraviolet light.
Aluminium gallium phosphide LEDs emit green light.

Principle of operation:

When Light Emitting Diode (LED) is forward biased, free electrons in the conduction band recombines with the holes in the valence band and releases energy in the form of light.
When LED is forward biased, free electrons from n-type semiconductor and holes from p-type semiconductor are pushed towards the active region.

When free electrons from n-side and holes from p-side recombine with the opposite charge carriers (free electrons with holes or holes with free electrons) in active region, an invisible or visible light is emitted.

In LED, most of the charge carriers recombine at active region. Therefore, most of the light is emitted by the active region. The active region is also called as depletion region.

The safe forward biased voltage of most LEDs is from 1V to 3 V and forward current ratings is from 200 mA to 100 mA.

Application of LED in indicative and lighting displays:

LEDs are used as status indicators on a range of equipment and installations because of their small size, low maintenance requirements, and low energy consumption.

LED Indicators are used for signal lamps, or warning lights, in many industries to provide visual indications of a system's status.

LED indicators are used to show the status of a function, a battery, or electronics.

LED displays are widely used in digital signage, scoreboards, advertising billboards, Stadium displays, dynamic decorative displays, and dynamic message signs on highways and more. They can withstand harsh weather conditions making them ideal for use in both indoor and outdoor environments.

Module: 6

Introduction to Transistors

Structure and operation of BJT. BJT configurations (only common emitter). FET structure and operation. Application of BJT and FET in amplification, switching and oscillators.

Transistors generally come in two types. They are bipolar junction transistor (BJT) and field effect transistor (FET).

Bipolar Junction Transistor (BJT)

The word transistor is derived from words transfer and resistor. The operation of a bipolar junction transistor is the transmission of the input signal from low to high resistance circuit.

Construction of BJT

BJT is a three-terminal (base, collector, and emitter) semiconductor device consisting of two p-n-junctions that are formed by sandwiching either p-type or n-type semiconductors between two p-type semiconductors. There are two junctions formed in BJT. They are Emitter-Base junction and Collector-Base junction.

Based on how the p-type and n-type semiconductor materials are arranged physically, there are two types of BJTs

NPN Transistor

p-type of semiconductor material is sandwiched between the two n-types of semiconductors in NPN type transistor. The two semiconductors of the n type act as the emitter and collector, respectively, while of p-type acts as the base.

PNP Transistor

n-types of semiconductor material is sandwiched between the two p-types of semiconductors in PNP type transistor. The two p-type semiconductors act as the emitter and collector, respectively, and the n-type acts as the base.

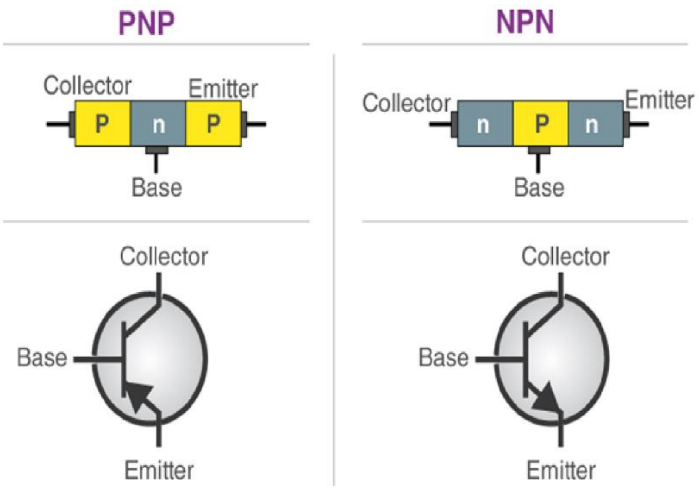

BJT operates in three regions:

- **Active region:** The transistor is in this region. When the collector-base junction is reverse-biased while the emitter-base junction is in forward-bias, then BJT works in the active area. As a result, BJT is used as an amplifier.
- **Saturation region:** The saturation region arises when the collector-base junctions and the emitter-base junction are both forward-biased. The transistor is on. Transistor operate as ON switch in or near the saturation region
- **Cut-off region:** Because the emitter and collector junctions are both in the reversed bias, so the BJT is off in this condition. Transistor operate as OFF switch.

BJT Configurations:

There are basically three possible ways to connect BJT in an electric circuit are:

- Common Collector (CC) Configuration: In the common collector configuration, the collector of the transistor is grounded, then the base turns as input and the emitter turns as output.
- Common Base (CB) Configuration: The base of transistor is grounded in common base configuration, with the emitter acting as the input and the collector as the output.
- **Common Emitter (CE) Configuration.:** Emitter of transistor is grounded in common-emitter configuration, and the base serves as input and the collector serves as output. The CE configuration has a forward biased BE junction and a reverse biased CB junction. The emitter current in given by: $I_E = I_C + I_B$

  A CE configuration offers a high voltage gain. So, it is frequently employed in voltage amplification. Typically used in general-purpose amplification, audio amplifiers and RF amplifiers.

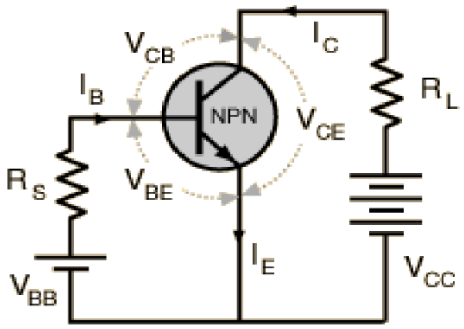

Input Characteristics of CE: Input characteristics refer to the curve between base current I_B and base-emitter voltage (V_{BE}) for a particular collector-emitter voltage value (V_{CE}).

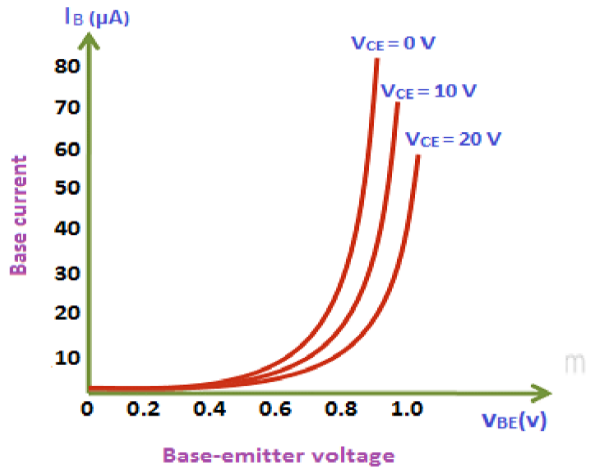

Output characteristics of CE: The output characteristics for a given base current I_B are shown by the curve formed between collector current (I_C) and collector-emitter voltage (V_{CE}).

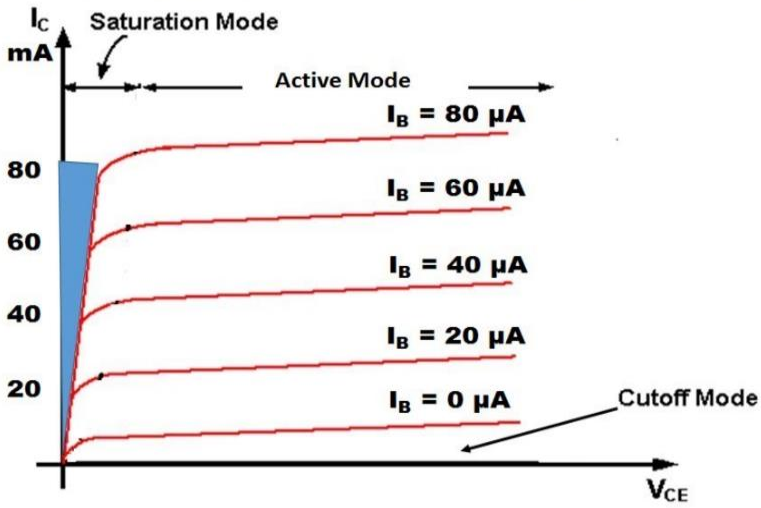

Application of BJT in amplification, switching and oscillators.

- When BJT used in the saturation and cutoff region, then it acts as a ON-OFF switch
- When BJT is operated in the active region is used as an amplifier.
- A transistor is used as an oscillator to produce electric oscillations of constant frequency and amplitude without any externally applied input signal, effectively converting DC energy obtained from a battery into AC energy.

Field-effect transistor (FET)

Field-Effect Transistor (FET) is a semiconductor device that consists of a channel made of a semiconductor material (n-type or p-type), with two electrodes connected at either end, namely the drain and the source.

The flow of current between the source and the drain terminals is controlled by a third electrode, known as the gate. The gate terminal is electrically insulated from the channel between source and drain.

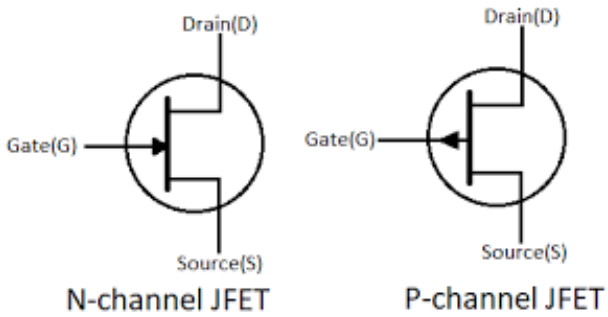

When a voltage is applied to the gate terminal, it creates an electric field in the channel region between source and drain. This electric field modulates the conductivity of the channel, acting like a "valve" that controls the current flow between source and drain.

Figure shows the structure of **p-channel FET and n-channel FET**

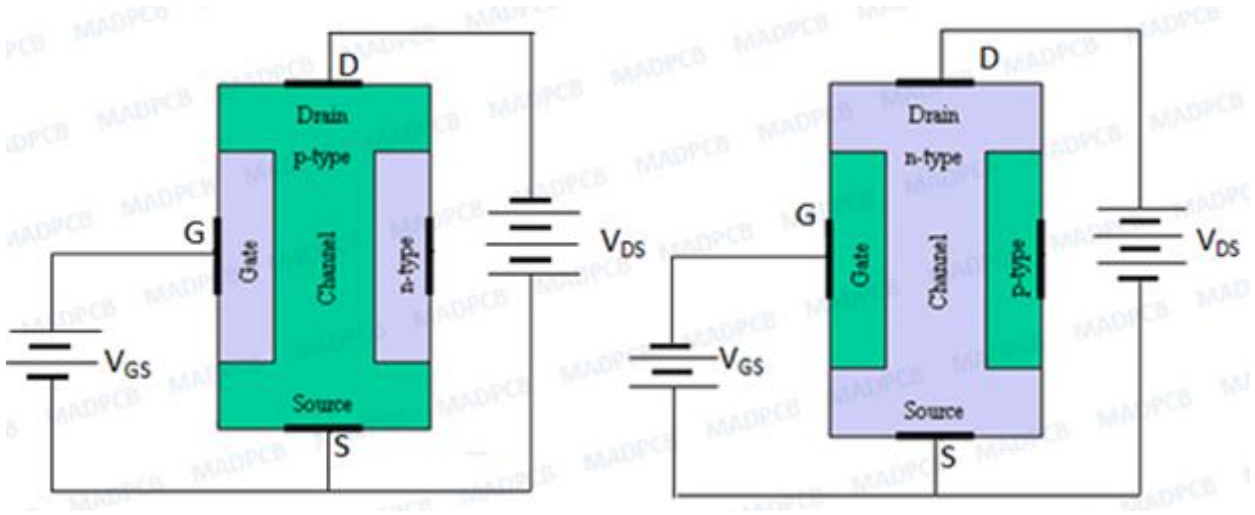

p-channel FET **n-channel FET**

The working principle:

It has 3 terminals: source, drain, and gate.

When No voltage applied to Gate terminal, and when a certain voltage is applied between the drain and the source, a majority carrier will drift between the drain and the source, generating a drain current.

For an n-channel FET, applying a positive voltage to the gate attracts free electrons in the channel, increasing its conductivity and allowing more current to flow between source and drain. For a p-channel FET, a negative voltage on the gate repels holes, increasing conductivity.
By varying the gate voltage, the conductivity and current flow through the channel can be finely controlled. This allows FETs to be used as electronic switches and in amplifying circuits.
A FET uses the electric field effect at input to control the output current, therefore its names as Field Effect Transistor. Because it only depends on the majority carrier in the semiconductor to conduct electricity, it is also called the unipolar transistor.
There are two main types of FET: **Junction FET (JFET)** and **metal-oxide-semiconductor FET** (MOSFET).
The electric field effect provides a high input impedance and low noise performance, making FETs useful in RF signal amplifiers.

Comparison of BJT and FET:

BJT	FET
BJT stands for Bipolar Junction Transistor.	FET stands for Field Effect Transistor.
In BJT, the current flow is due to both majority and minority charge carriers. Thus, it is a bipolar device.	In FET, the electric current flows only due to majority charge carriers. Thus, it is a unipolar device.
BJT has three terminals viz. Emitter, Base and Collector.	FET also has three terminals viz. Source, Drain and Gate.
BJT is a current-controlled device.	FET is a voltage-controlled device.
BJT are of two types: NPN transistor and PNP transistor.	FET are also of two types: N-channel FET and P-channel FET.
Low input impedance	High input impedance
The switching speed of BJT is low.	FET has higher switching speed.
BJT has more thermal noise.	BJT has less thermal noise.